1170105010

WPU Wiring Diagram

Models

18E1C4DR410.230/3/60.AC

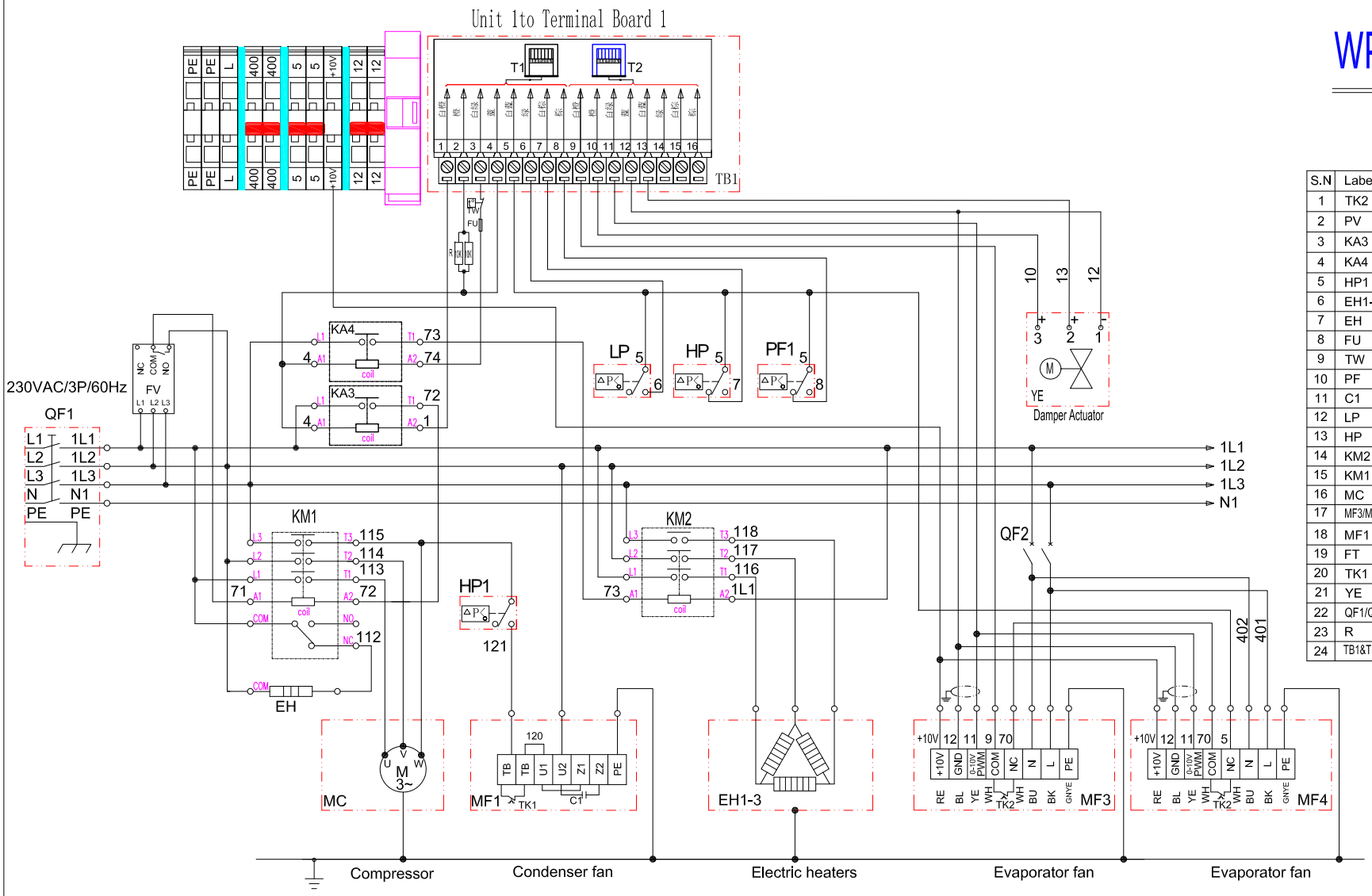

S.N	Label	Description
1	TK2	Evaporator fan overload
2	PV	Brown-out circuit used for compressor protection
3	KA3	Compressor pilot relay
4	KA4	Heater pilot relay
5	HP1	Condenser fan switch
6	EH1-3	Electric heaters
7	EH	Crankcase heater
8	FU	Thermal fuse for heating
9	TW	Temperature switch for heating
10	PF	Air pressure differential swtich
11	C1	Capacitor for condenser fan
12	LP	Low-pressure swtich
13	HP	High pressure switch
14	KM2	Electric heaters AC contactor
15	KM1	Compressor AC contactor
16	MC	Compressor
17	MF3/MF4	Evaporator fan/Supply fan
18	MF1	Condenser fan
19	FT	Compressor overload
20	TK1	Condenser fan overload
21	YE	Air damper actuator
22	QF1/QF2	Breaker
23	R	Resistance
24	TB1&TB2	Terminal Board (CAT-5 Connection)